PROJECT 08: Design and Analysis of Current Mirror by using Cadence Virtuoso

A Comprehensive Study of Analog Circuits

By: Priya Chaudhary, Astitva Johri and

Bhavya Solanki

Chapters:

List of Figures……..……. 3

1. Introduction …….. 4
2. Brief Description…… 5
3. Circuit Design……. 6-7
   - 3.1 Design Steps……..……. 6
   - 3.2 Simulation……...… 6
   - 3.3 Important Considerations……..…. 7
4. Simulation Results…….. 8
5. Advantages and Disadvantages…….. 9
   - 5.1 Advantages……. 9
   - 5.2 Disadvantages……. 9
6. Conclusion…….. 10
7. Frequently Asked Questions (FAQs)…….. 11

LIST OF FIGURES

Figure 3.1 Circuit of Current Mirror..... 7
Figure 4.1 Simulation Results of Current Mirror..... 8

1. INTRODUCTION

The current mirror is a cornerstone circuit used in analog electronics for controlling and regulating current within integrated circuits (ICs). It enables the replication or "mirroring" of a reference current from one transistor to another, typically used in biasing, current sources, and current sensing applications. The design and analysis of current mirrors are crucial for ensuring consistent and accurate performance in analog systems, such as operational amplifiers, voltage regulators, and various signal processing circuits.

The current mirror operates by creating a relationship between the currents flowing through two or more transistors, which are typically matched in terms of their geometrical and electrical properties. The most basic current mirror consists of two transistors with their gates and drains connected, allowing one transistor (the reference transistor) to set the current that will be mirrored by the second transistor (the output transistor). However, the simple current mirror, while straightforward to design, suffers from limitations such as low output resistance and susceptibility to transistor mismatches, which can affect the accuracy of current mirroring.

To overcome these limitations, more advanced current mirror topologies are employed, such as the cascode and Wilson current mirrors.

2. BRIEF DESCRIPTION

A **current mirror** is a circuit configuration used to copy or "mirror" a current from one transistor (called the reference transistor) into another transistor (called the output transistor). The current in the output transistor ideally matches the reference current, and the circuit is designed to minimize variations due to process, temperature, and voltage changes.

Types of Current Mirrors:

- **Simple Current Mirror**: Consists of two transistors with the same gate-source voltage, ensuring identical currents.
- **Cascode Current Mirror**: Adds an additional transistor to increase the output resistance and improve performance.
- **Wilson Current Mirror**: Uses a combination of transistors to reduce error due to mismatches.

In a basic current mirror, two or more transistors are matched so that the current flowing through the reference transistor (the "master" transistor) is mirrored by the output transistor(s) (the "slave" transistors). The gates and sources of the transistors are usually connected in such a way that the same gate-source voltage is applied to both transistors, forcing them to conduct equal currents, assuming ideal conditions.

3. CIRCUIT DESIGN

3.1 Design Steps:

1. **Create a new schematic** in Cadence Virtuoso.
2. **Place two N-channel MOSFETs**:
   - **M1**: Reference transistor, which sets the current.
   - **M2**: Output transistor, which mirrors the current.
3. **Connect the drains** of M1 and M2 together, forming the output node.
4. **Connect the source of M1** to ground (or VSS), and the source of M2 to the output node.
5. **Gate Connection**: Connect the gates of M1 and M2 together to ensure that both transistors have the same gate-source voltage (Vgs).
6. **Reference Current**: Place a **current source** (or a voltage source with a series resistor) to provide the reference current through M1. This will set the current that will be mirrored.
7. **Output Node**: The drain of M2 becomes the output node for the mirrored current.

3.2 Simulation:

- **DC Analysis**: To verify that the current in M2 matches the reference current set by M1.

3.3 Important Considerations:

- Ensure that the **transistor dimensions (W/L)** are appropriately sized to allow for accurate mirroring.
- **Current Matching**: Ensure that M1 and M2 are matched in terms of their process parameters (e.g., channel length and width).

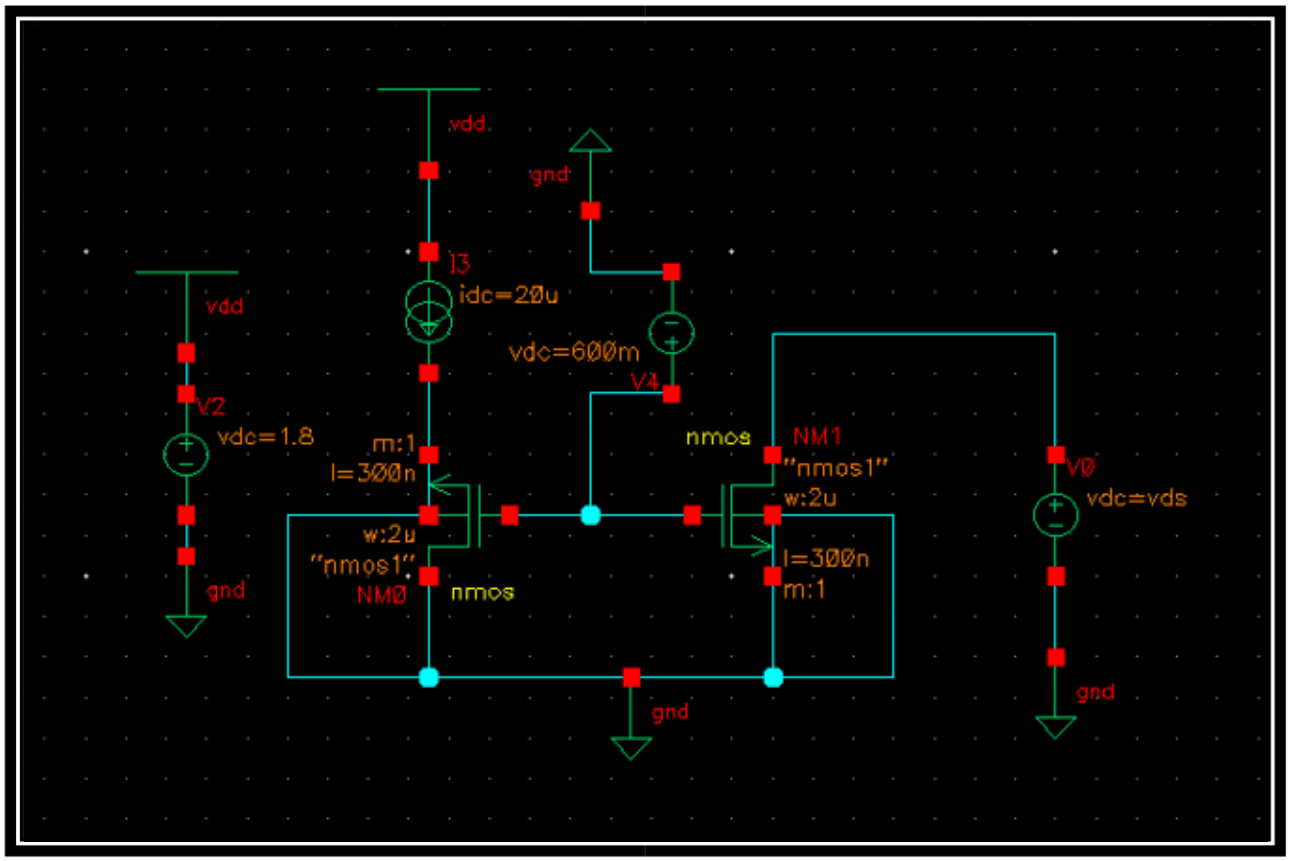

Figure 3.1 Circuit of Current Mirror

4. SIMULATION RESULTS

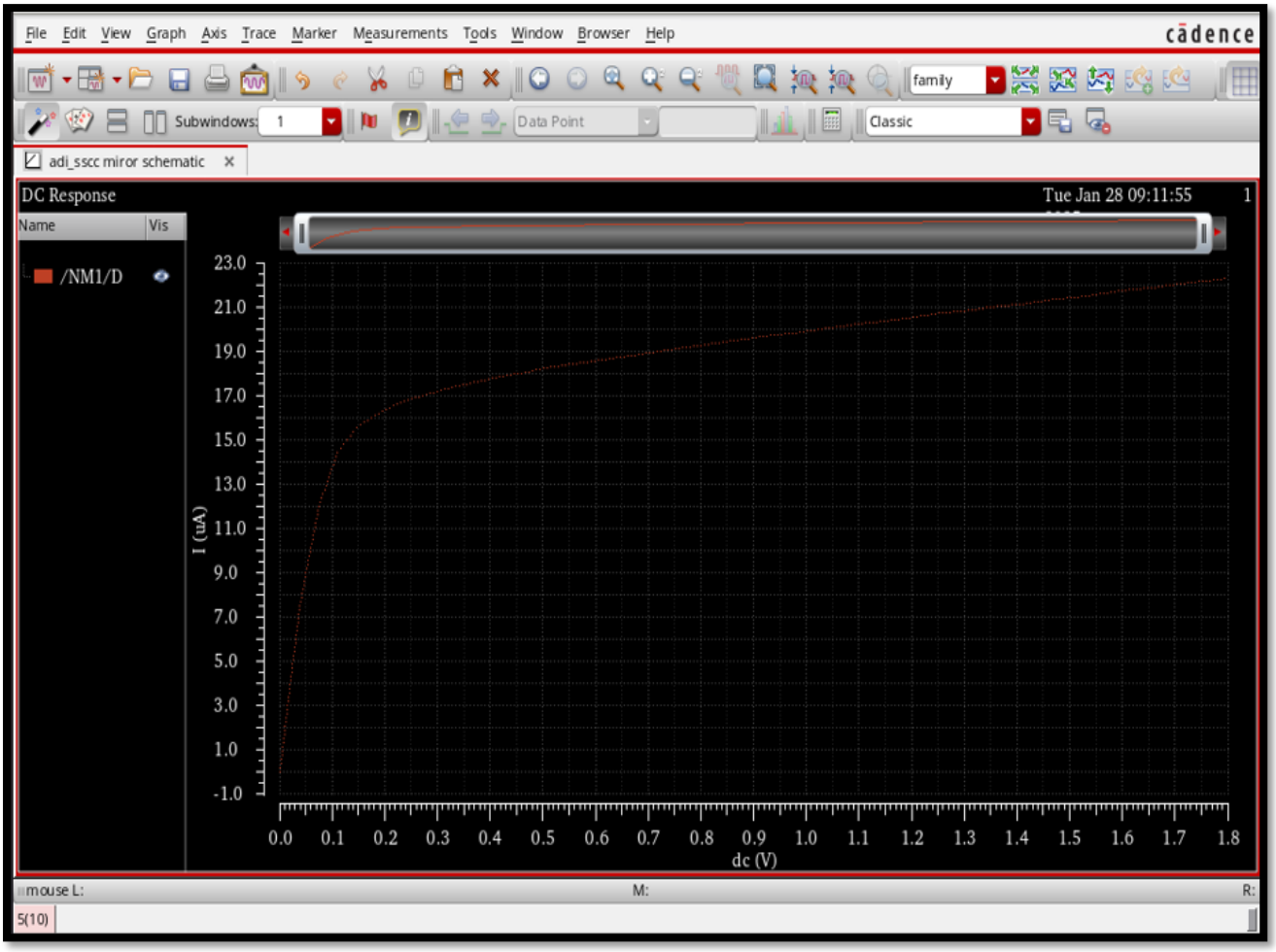

Figure 4.1: Simulation Results of Current Mirror

5. ADVANTAGES AND DISADVANTAGES

5.1 Advantages:-

1. **Precision:** Provides an accurate replication of reference currents.
2. **Current Regulation:** Used in biasing circuits for transistors to ensure stable operation.
3. **Scalability:** Can be used in a wide range of applications, from lowpower circuits to high-performance systems.
4. **Improved Performance:** Cascode and Wilson configurations enhance performance by increasing output resistance and reducing current mismatch.

5.2 Disadvantages:-

1. **Mismatches:** Process and temperature variations can lead to inaccuracies in current mirroring.
2. **Complexity:** Advanced current mirrors (such as cascode and Wilson) require additional components, increasing design complexity.
3. **Voltage Headroom:** Some configurations (e.g., cascode) require additional voltage headroom, which might not be ideal for lowvoltage designs.

6. CONCLUSION

The current mirror is an essential building block in the design of analog circuits, providing a reliable means to replicate currents across various components. As one of the most widely used components in integrated circuit design, it plays a crucial role in applications such as biasing, current sensing, and providing stable current sources for active devices. The **Cadence Virtuoso** design environment provides a powerful platform to implement and simulate current mirrors with high accuracy and ease, allowing engineers to explore and optimize their designs.

The advantages of current mirrors, such as their scalability, precision, and ability to regulate current, make them indispensable in many analog and mixed-signal circuits. However, trade-offs such as design complexity and voltage headroom requirements must be carefully considered when selecting the appropriate mirror configuration for a given application.

By understanding the design principles and utilizing Cadence Virtuoso for simulation and optimization, engineers can create high-performance current mirrors that meet the demanding requirements of modern analog systems.

In conclusion, the current mirror remains a fundamental component in the realm of analog circuit design, and with the continuous advancements in simulation tools like Cadence Virtuoso, designers have the capability to enhance their circuit designs for greater performance, efficiency, and reliability in a wide range of applications.

7. FREQUENTLY ASKED QUESTIONS (FAQs)

Q1 What is the role of a current mirror in a circuit?

Answer: A current mirror is used to replicate a reference current in one part of a circuit to another part. It is commonly used for biasing transistors in analog circuits.

Q2 Why is a cascode current mirror preferred over a simple current mirror?

Answer: A cascode current mirror provides better output resistance and higher current accuracy by adding an additional transistor that reduces voltage variation effects at the output node.

Q3 What simulation parameters should be considered when designing current mirrors?

Answer: Key parameters include DC analysis for current matching, transient analysis for behavior over time, and small-signal analysis for evaluating the performance of the current mirror in a circuit.

Q4 Can current mirrors work with both N-channel and P-channel MOSFETs?

Answer: Yes, current mirrors can be designed using either N-channel or Pchannel MOSFETs, depending on the requirements of the application.

Q5 How can I improve the accuracy of a current mirror?

Answer: Accuracy can be improved by using higher-quality components, reducing mismatches between transistors, and implementing advanced current mirror configurations like the Wilson mirror.